REVISIONS				
NO.	DATE	DESCRIPTION	BY	CKD

ITEM NO.	PART NO.	CAT. NO.	DESCRIPTION	DWG. NO.
1	F411600	EPR66S-12	POLE EYE PLATE	BM7976

NOTES:

1.0 MATERIAL–DUCTILE IRON PER ASTM A–536,
2.0 COATING–HOT DIP GALVANIZE PER ASTM A–153.
3.0 PART NO.–EPR–66S–12, (F411600)
4.0 EST. WEIGHT – 5.65 LBS.
5.0 DIMENSION IN INCHES.

STRENGTH RATING:
45° – 36,000 LBS.
90° – 30,000 LBS

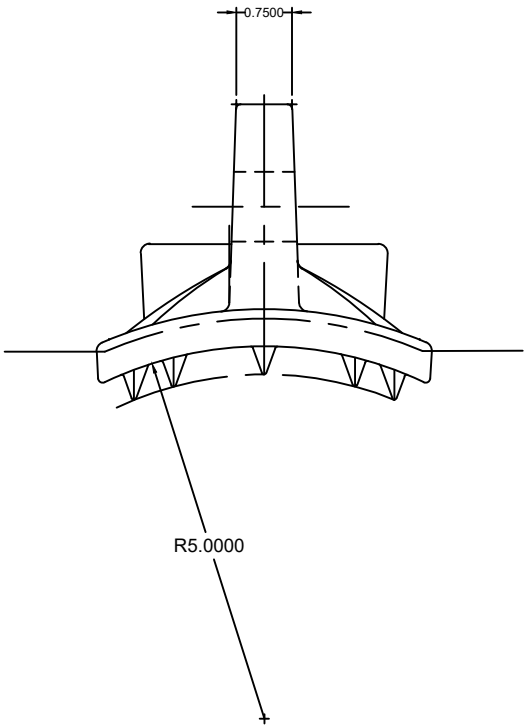

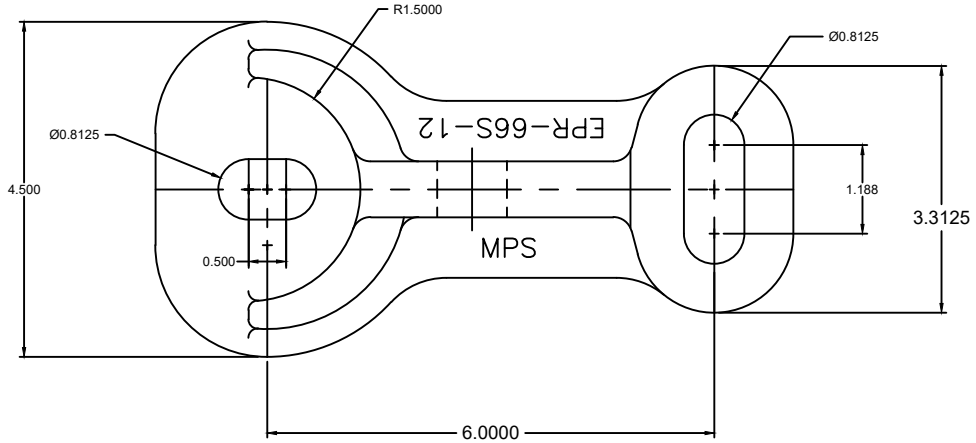

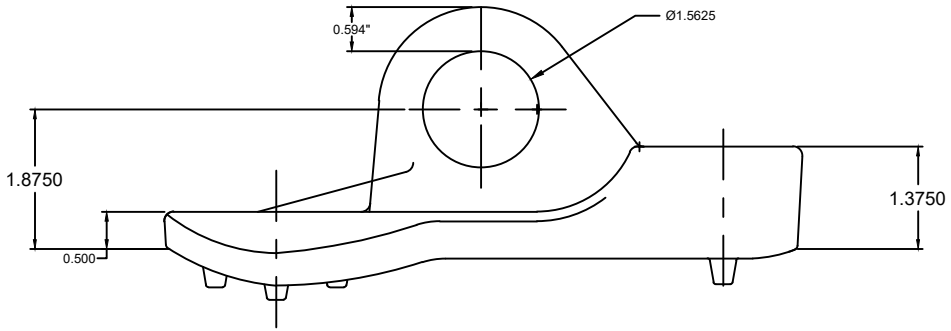

MacLean Power Systems
BIRMINGHAM , ALABAMA

DRAWN BY: KMK	APPROVED BY: / CHECKED BY:	SCALE: NONE

POLE EYE PLATE
EPR–66S–12

DATE: 11/19/26	DRAWING NO: CEB–1366–2	R/0

This information is confidential and is the property of Maclean Power Systems. It may not be made public or reproduced except that the Customer may make copies for use solely in instillation, maintenance, and operation of products supplied by Maclean Power Systems.

ENG. REF.