REVISIONS				
NO.	DATE	DESCRIPTION	BY	CKD
1	7-17-89	8° DRAFT WAS 5°; ADDED 3° TILT IN PATTERN	JV	WCL

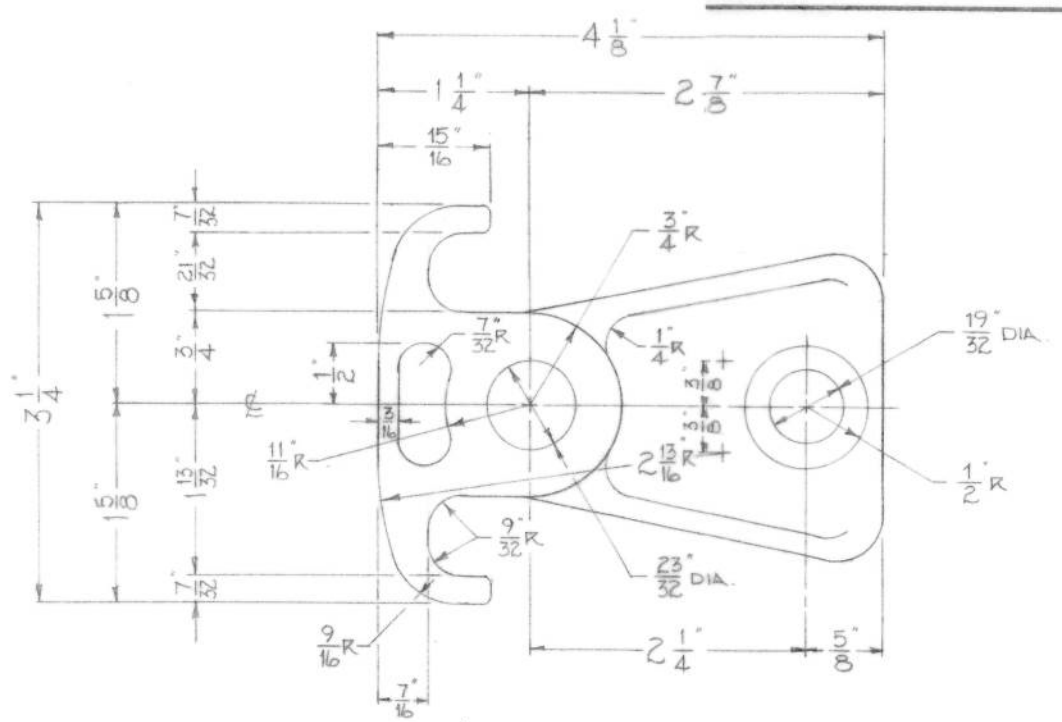

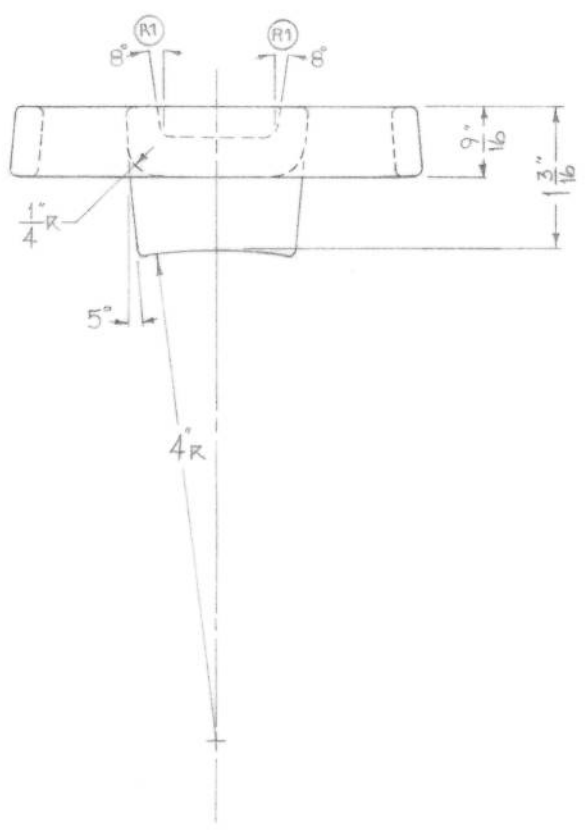

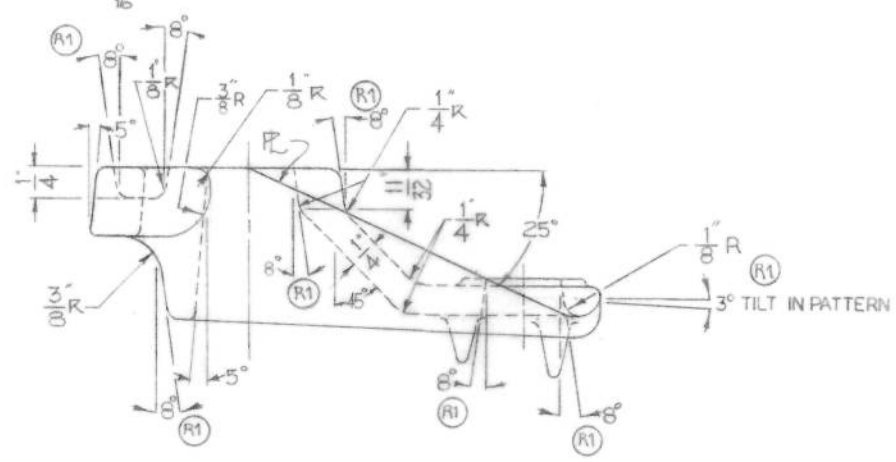

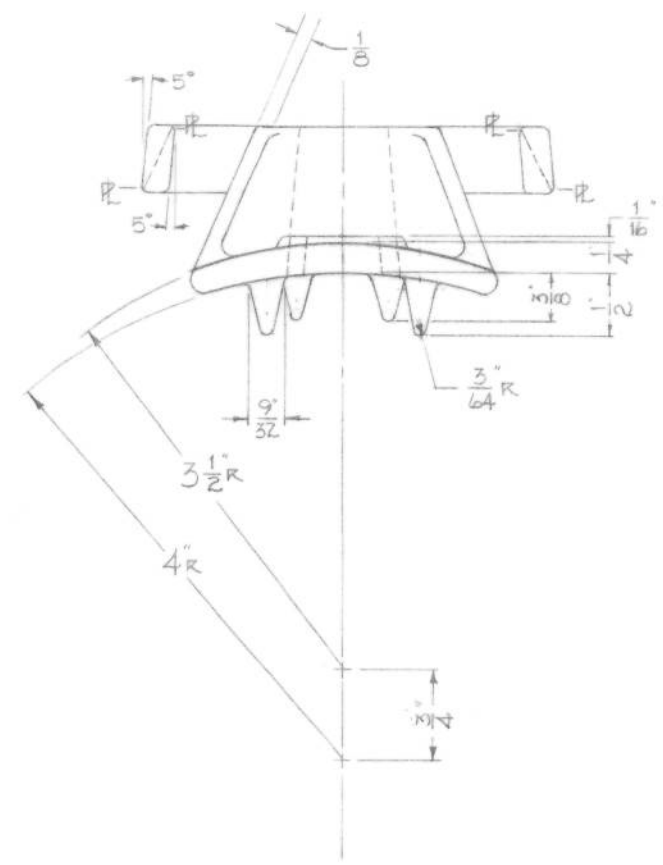

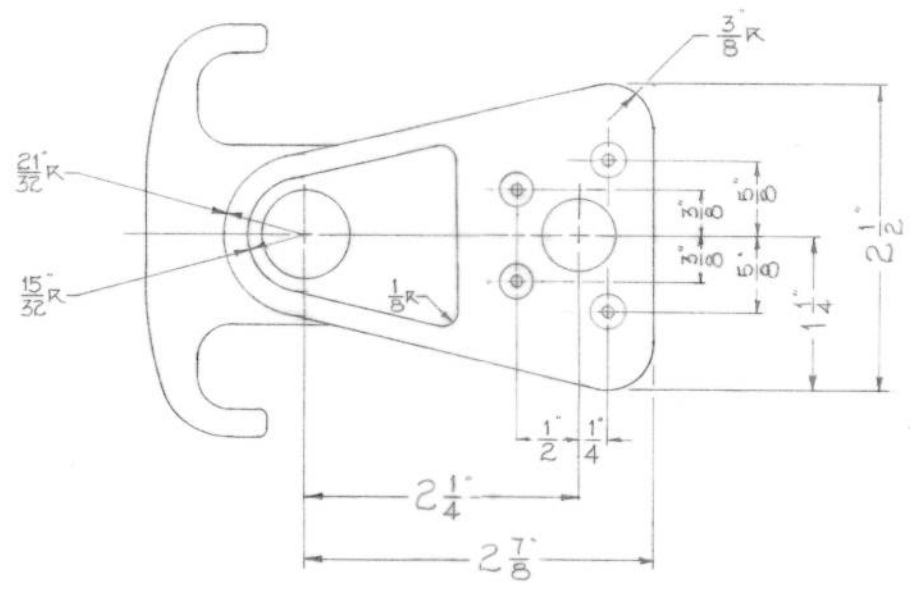

NOTES

1. MATERIAL - ALUMINUM ALLOY; 356-T6
2. DRAFT - 5° UNLESS NOTED
3. RADII - 1/16" UNLESS NOTED
4. MARKING, RAISED LETTERS - R/B, AG-5
   P-6280-1

B/N BETHEA / NATIONAL CORPORATION
PELHAM, ALABAMA
A SUBSIDIARY OF INTERPACE CORPORATION

AG-5

GUY HOOK ATTACHMENT

DATE: 1-19-81	SCALE: FULL	NO. CP-6280	R/1	SHT. 1 OF 1
DWN. BY: EHJ	CKD. BY: KJ	APR. BY: KS		

ENG. REF.