ITEM NO.	DESCRIPTION	QTY.
1	4.00" CHANNEL X 12.00" - A36 ALLOY STEEL	1
2	4.00" CHANNEL X 54.50" - A36 ALLOY STEEL	1
3	6.00" CHANNEL X 22.00" - A36 ALLOY STEEL	2
4	6.00" CHANNEL X 22.00" (1.50" HOLES) - A36 ALLOY STEEL	1
5	FLATBAR - 1/4" X 4.00" X 2.25" - A36 ALLOY STEEL	1
6	CARRIAGE BOLT - 1/2"-13 X 3.00", GRADE 5	6
7	1/2" PUSH NUT	6
8	HEX NUT - 1/2"-13	12

PAPER SIZE	DRAWING NUMBER
B	GD-SF-CA-3815XH

REVISIONS

ZONE	REV.	REVISED BY:	REVISION DATE:	ECO #
	A	N/A	2/09/2017	N/A
	B	JRK	1/16/2025	13293

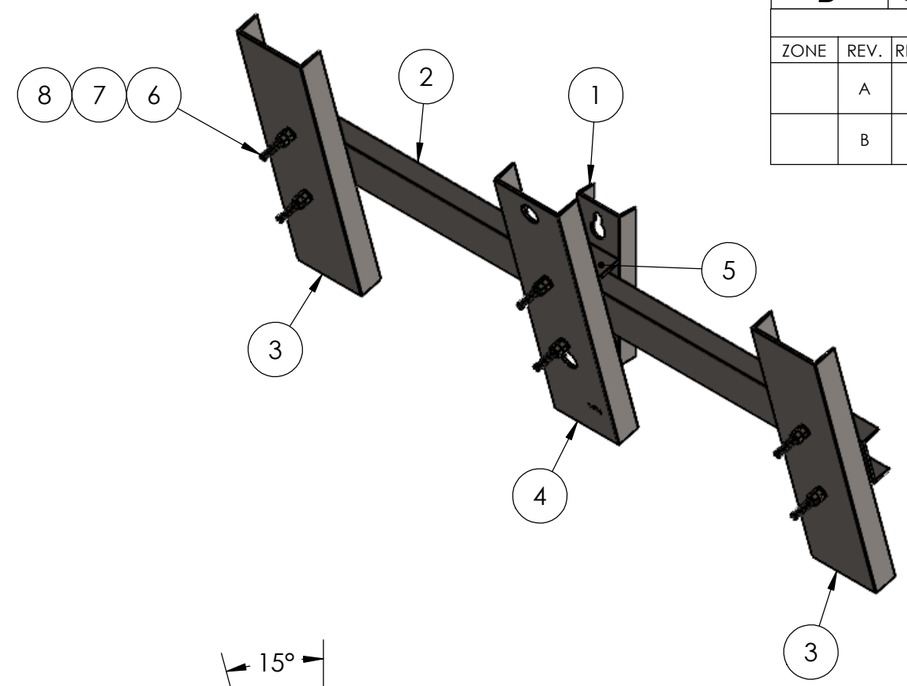

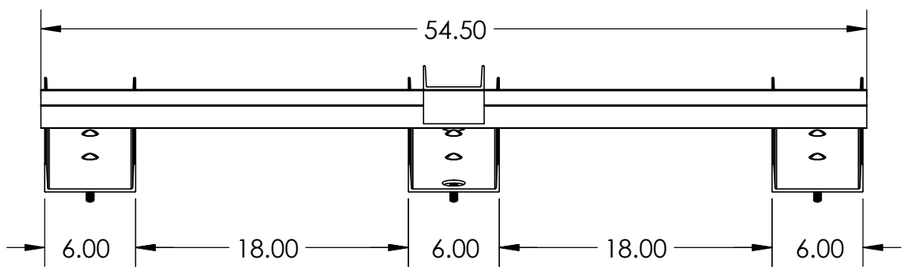

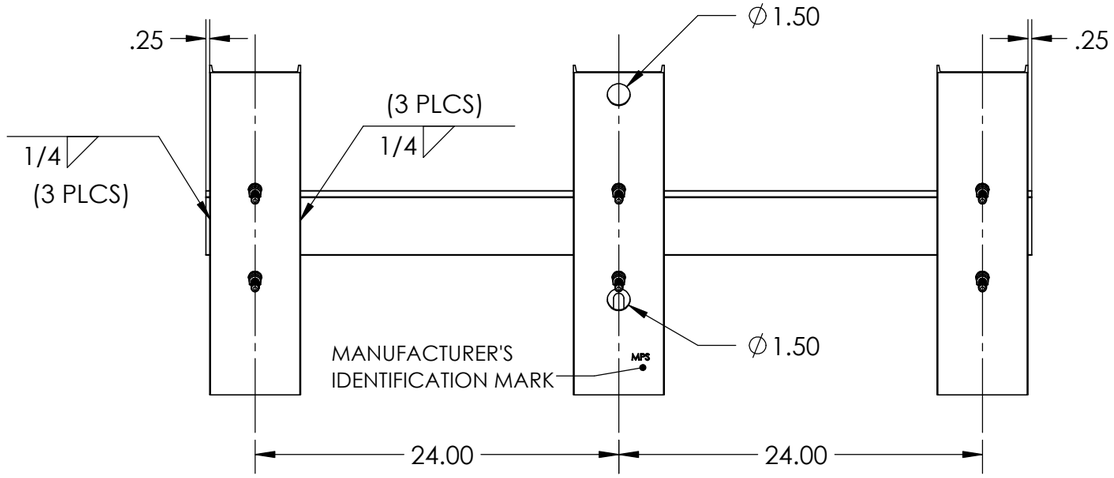

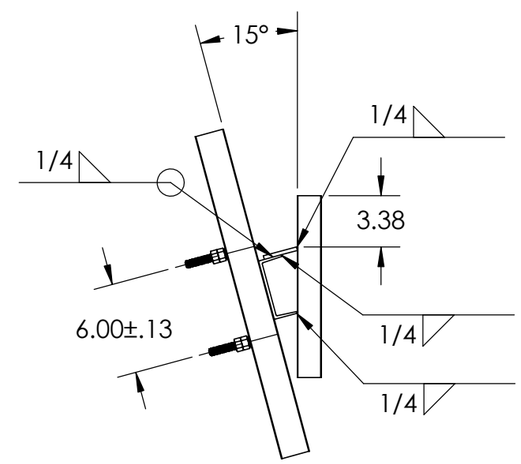

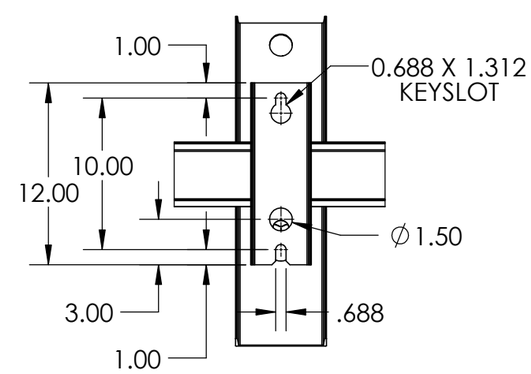

REAR MOUNTING VIEW

NOTES:

1. ALL DIMENSIONS ARE REFERENCE AND IN INCHES UNLESS OTHERWISE NOTED.
2. ALL CONNECTIONS TO BE WELDED AS SHOWN.
3. FINISH: HOT DIP GALVANIZED PER ASTM A153.
4. ESTIMATED WEIGHT: 60 LBS
5. FP&L M&S NO. 141-218-009

P/N: F441341

This drawing contains confidential information that is the property of MacLean Power, L.L.C. ("MacLean"). Use of MacLean's confidential information without MacLean's express written consent is strictly prohibited and may expose you to legal liability. If you believe that you received this material in error, please destroy it or return it to "MacLean Power, L.L.C., 11411 Addison Street, Franklin Park, Illinois 60131, USA."

UNLESS OTHERWISE SPECIFIED DIMENSIONS ARE IN:	
INCHES	
TOLERANCES ARE:	
.XX	----------
.XXX	----------
X/XX	----------
ANGLES	----------

MacLean POWER SYSTEMS

WWW.MACLEANPOWER.COM

DRAWING NUMBER: GD-SF-CA-3815XH	DO NOT SCALE DRAWING
SHEET NAME: Sheet1 — 1 OF 1	CAD GENERATED DRAWING DO NOT MANUALLY UPDATE
DRAWING DESCRIPTION: DISCONNECT SWITCH BRACKET	DESIGN DATE: 1/16/2025
CATALOG NO.: SF-CA-3815XH	DRAWN BY: JRK
	ENGINEER: JRK
	APPROVED: XXX
DRAWING SCALE: 1:10	REVISION: B